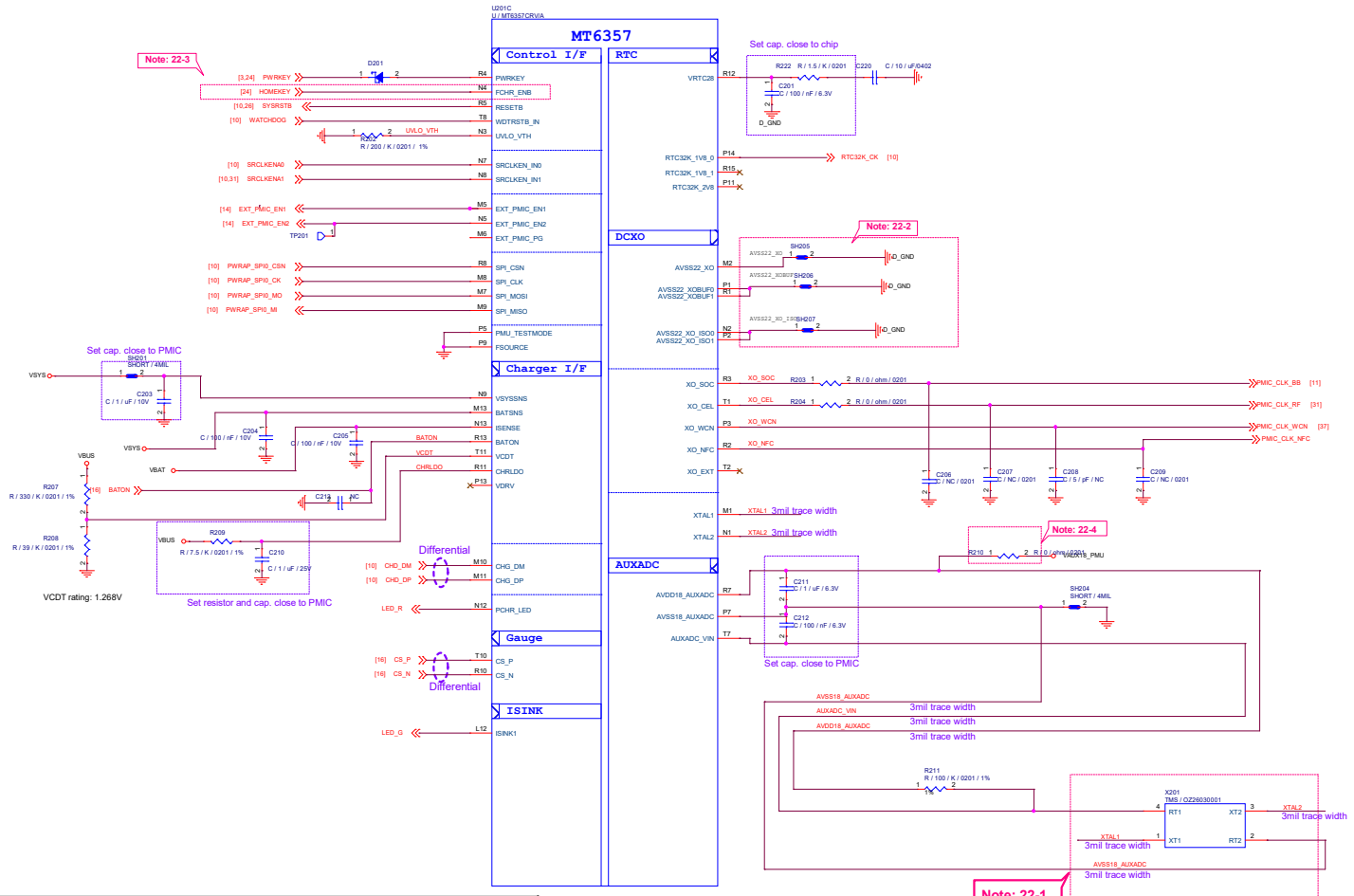

Note 22-1:	Please refer to MT6765_MT6357 Co-Clock Design Notice for co-layout guide
Note 22-2:	1. Please Connect P1 and R1 ball first and then to GND 2. Please Connect P2 and N2 ball first and then to GND 3. Please connect DCXO GND to main GND by independent L1-2 GND via.; DO NOT connect it through L1 GND
Note 22-3:	Let floating if disable HOMEKEY function
Note 22-4:	Please follow MT6765_MT6357 Co-Clock Design Notice for Layout guide of VAUX18, then R210 can use 0 ohm to replace BEAD.

Title	Amman		
Size C	Document Number	POWER_MT6357_IF	Rev V1.0
Date: Wednesday, April 01, 2020	Sheet 2 of 38		

Switching Charger Power Path

RTA6953:address: D6H BQ25601:address: 6BH

PG

Open drain active low power good indicator. Connect to the pull up rail through 10-kΩ resistor. LOW indicates a good input source if the input voltage is between UVLO and ACOV, above SLEEP mode threshold and above POR threshold, is above 3V mA.

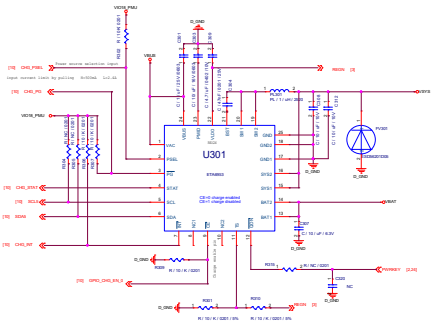

Title	Annisa
Size	Document Number	Rev
10	10_POWER_LCM8809_IN_PL6000	V1.0
Date: Wednesday, April 29, 2020	Sheet 1 of 10

Project Name

Title	11_POWER_SubPMIC-General
Size	MTK Confidential
Date: Wednesday, April 29, 2020	Sheet 1 of 10

Flash LED Driver

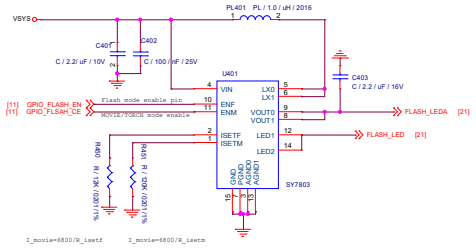

Backlight

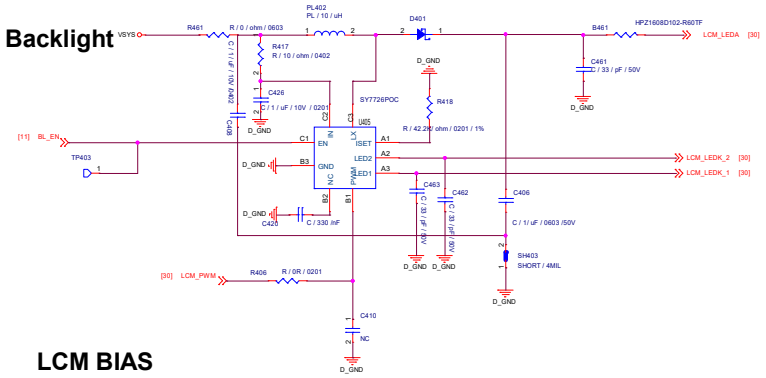

LCM BIAS

Address: 0X3E

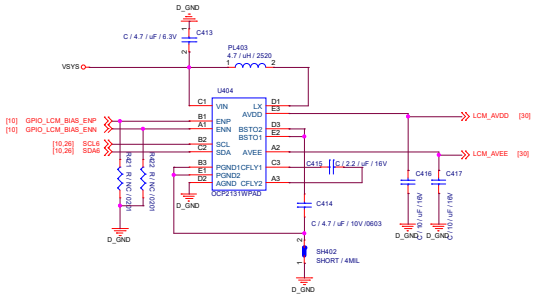

Title	Arman		
Size C	Document Number 04_POWER_LCMBIAS_BL_FLASH		Rev V1.0
Date: Wednesday, April 01, 2020	Sheet 4 of 38		

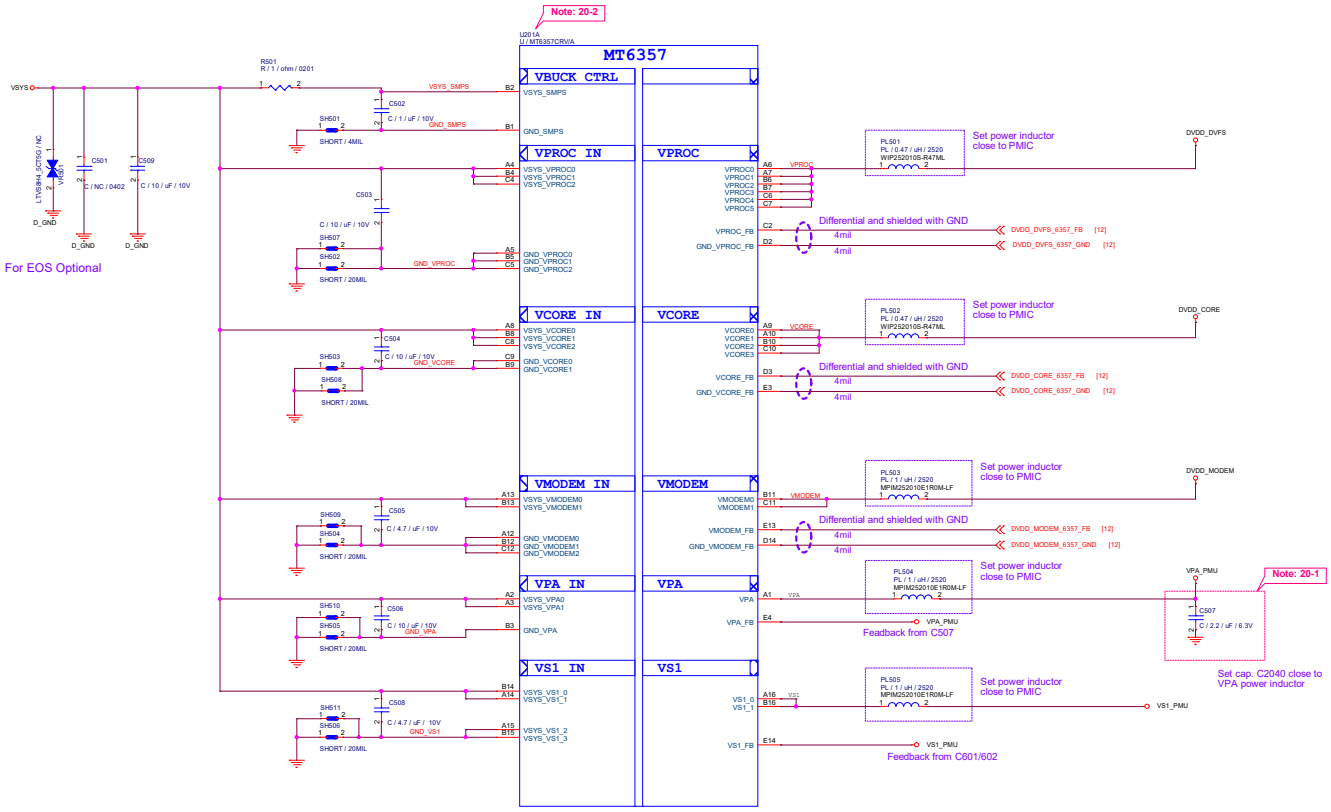

Note 20-1: C507, please choose 0402 size

Note 20-2: PMIC Part number notice for MT6765/62/61 platform

MTK Platform	PMIC
MT6765 / 62	MT6357 CRV
MT6761	MT6357 MRV

Title	Amman		
Size C	Document Number POWER_MT6357_Buck		Rev V1.0
Date: Wednesday, April 01, 2020	Sheet 5 of 38		

1. "Typical Cap" defined in design notice is the minimum cap. to LDO Cout. 2.
NC cap can move to application, if (PCB L<20nH, PCB R<0.2 ohm)
=> value and placement of Cap, please refer design notice

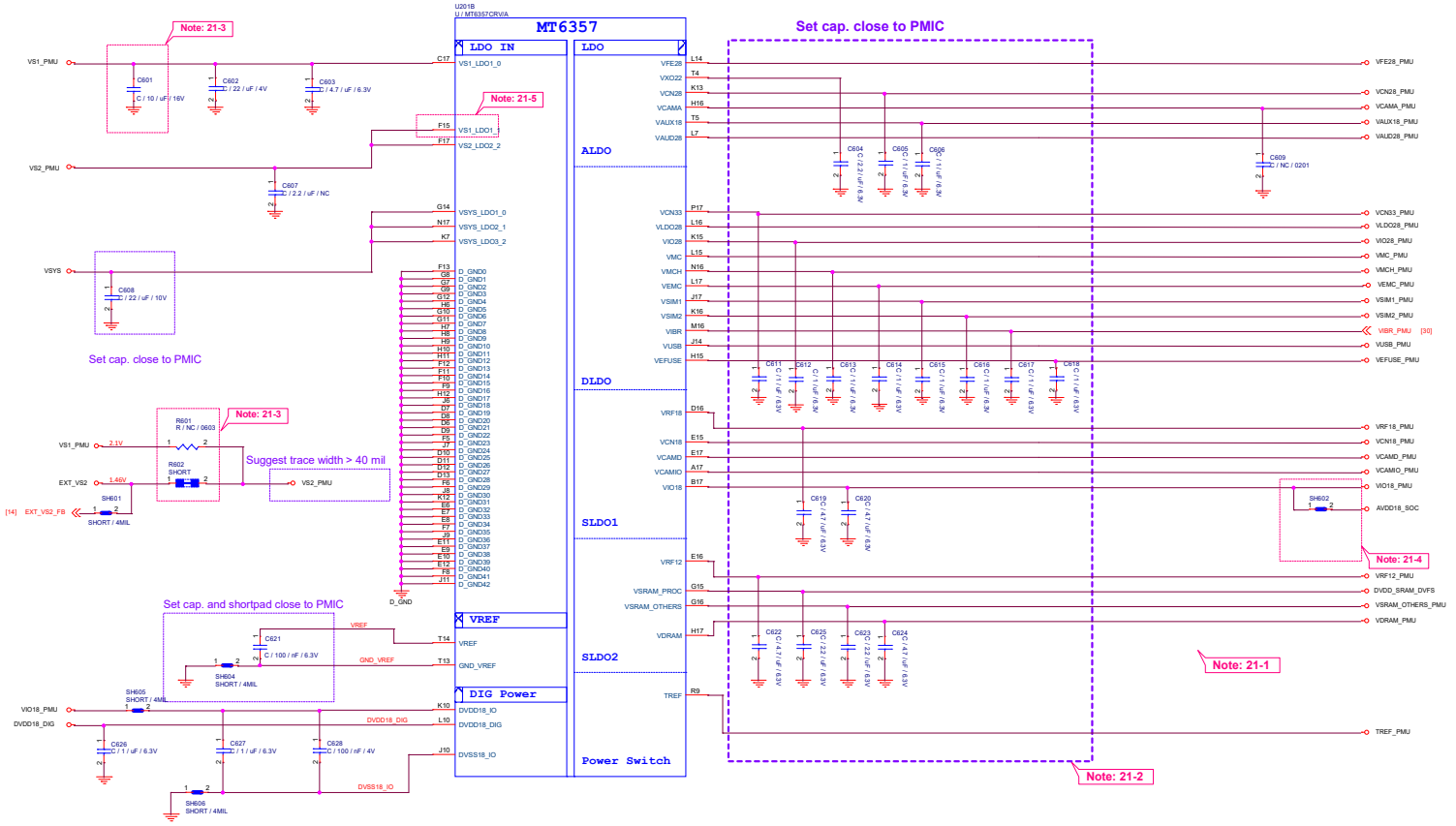

Note 21-1: If these power trace can meet LDO layout constraint, these CAP can be NC or removed. Please refer to MT6357 design notice.

Note 21-2: Output cap range please follow MT6357CRV LDO design notice

Note 21-3: Ext Buck BOM option

	Ext. buck option	
	w/ EXT VS2 Buck	w/o EXT VS2 Buck
C601	10uF	22uF, 0603
R602	0-ohm , 0603	NC
R601	NC	0-ohm , 0603

Note 21-4: Please set SH602 and SH603 close to C620, making star connection among VIO18_PMU, AVDD18_SOC, and EMI_VDD1 near to LDO cap. C620

Please also refer to MT6357 design notice for further detail design information

Note 21-5: Please connect VS2_LDO1(F15) to VS1_PMU if voltage applied to VCAMD(E17) >= 1.3 V

Size C	Document Number POWER_MT6357_LDO		Rev V1.0
Date: Wednesday, April 01, 2020	Sheet 6 of 38		

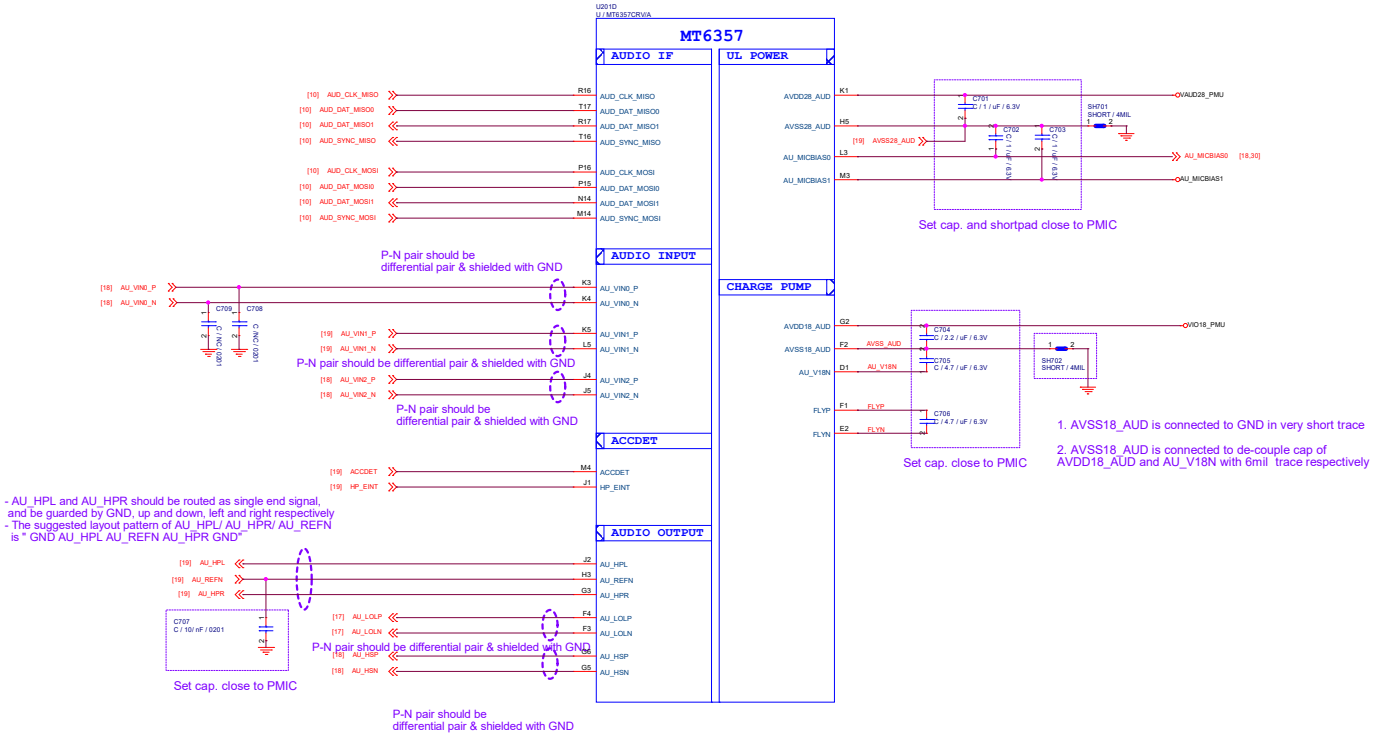

Title	Amman		
Size C	Document Number POWER_MT6357_Audio		Rev V1.0
Date: Wednesday, April 01, 2020	Sheet 7 of 38		

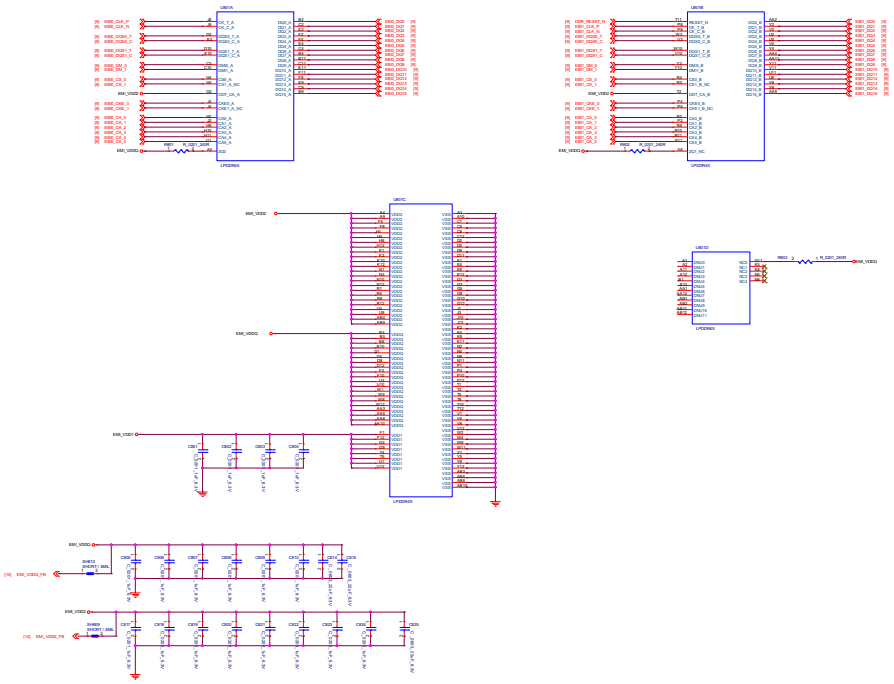

Title	Axiomin		
Size	Document Number		Rev
D	PCM6N_M7800_Audio		V1.0
Date: Wednesday, April 16, 2025	Time:	Sheet 8 of 38	

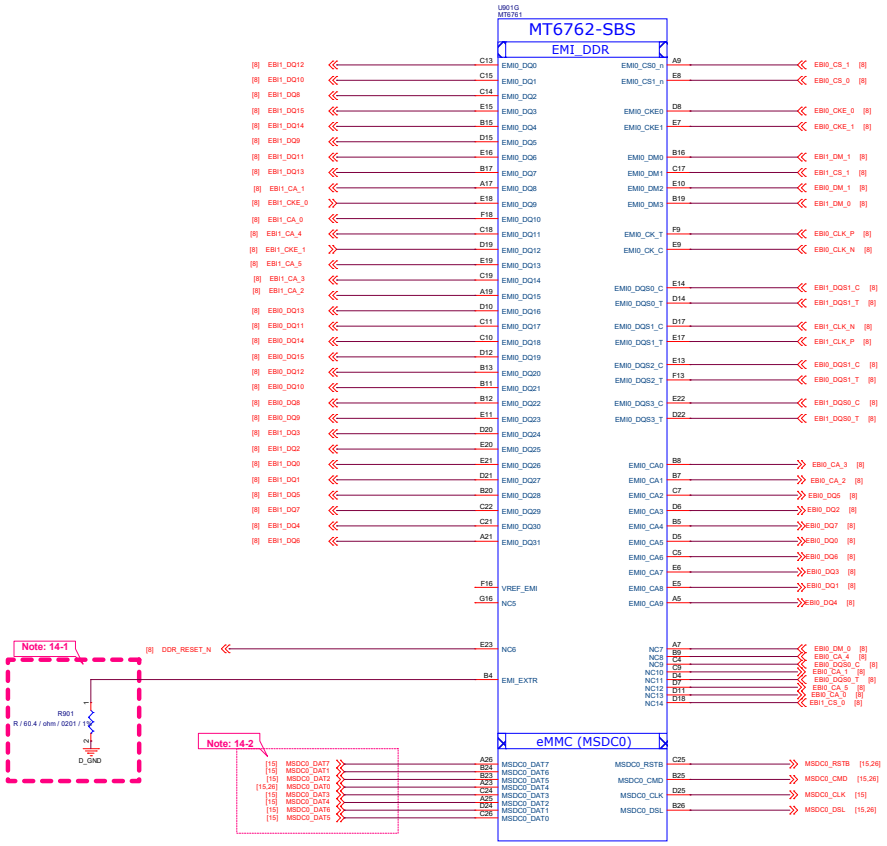

Note 14-1: R4001 please select 34.8 ohm (1%) resistor

Note 14-2: Please check eMCP LP3 and eMCP LP4X pin mux

Title	Ammon		
Size C	Document Number MT6761_EBI		Rev V1.0
Date: Wednesday, April 01, 2020	Sheet 9 of 38		

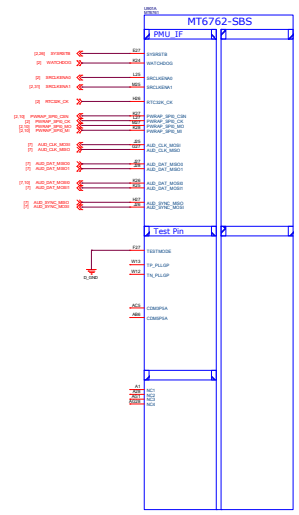

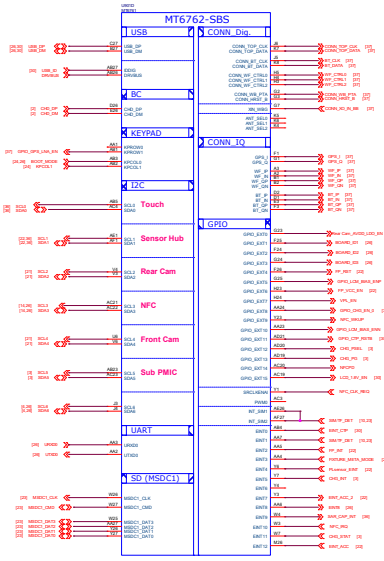

Note 12-3: "PWRAP_SPI0_CSN" and "AUD_DAT_MOSI0" are bootstrap pin to select which interface will be the JTAG pin out.

PWRAP_SPI0_CSN	AUD_DAT_MOSI0	JTAG Function	
default=PU	default=PD	AP_JTAG	MD_JTAG
HI	LO	N/A	N/A
HI	HI (Ex.ext. PU)	SPI0+EINT8	SPI1+SPI3
LO (Ex.ext. PD)	LO	SPI0+EINT8	N/A
LO (Ex.ext. PD)	HI (Ex.ext. PU)	MSDC1	N/A

Note 12-4: PWRAP_SPI0_MI is DDR type feature in bootstrap

PWRAP_SPI0_MI	Booting interface	
default=PU	DDR	MSDC0 pin mux
LO (Ex.ext. PD)	LPDDR3	follow LP3 Ref SCH.
HI	LPDDR4X	follow LP4X Ref SCH.

PWRAP_SPI0_MI	PWRAP_SPI0_MO	Booting interface	
default=PU	default=PD	DDR	MSDC0 pin mux
LO (Ex.ext. PD)	LO	LPDDR3	follow LPDDR3 Ref SCH.
LO (Ex.ext. PD)	HI (Ex.ext. PU)	N/A	N/A
HI	LO	LPDDR4X	follow LP4X/LP4 Ref SCH.
HI	HI (Ex.ext. PU)	LPDDR4	follow LP4X/LP4 Ref SCH.

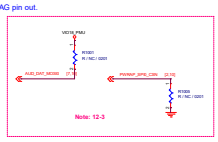

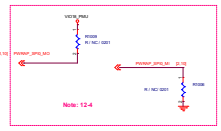

Title	Axonon		
Size	Document Number		Rev
A3	MT6762_SPI0		V1.0
Date:	Wednesday, April 08, 2020	Sheet 15 of 38	

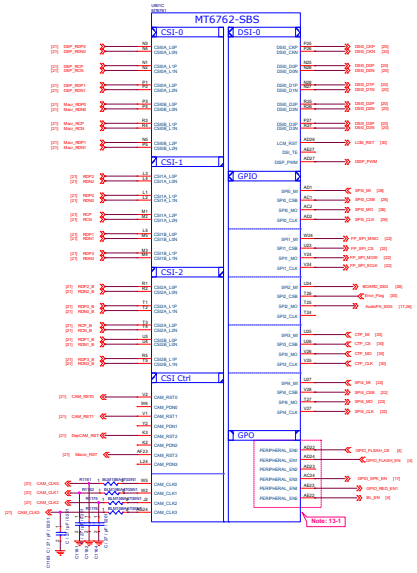

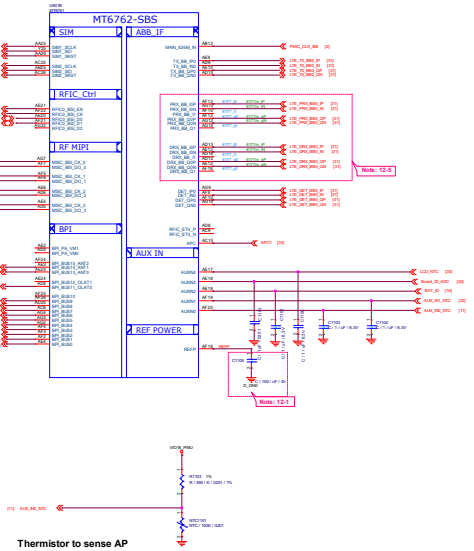

Note 12-1: The de-coupling cap. for REFP (AF18 ball) have to be placed as close to BB as possible.

Note 12-2: To shunt a 1uF capacitor in the AUXIN ADC input to prevent noise coupling. It should be placed as close to BB as possible. Connect the unused AUX ADC input to GND.

Note 12-5: Please set unused IO pins in NC

Note 13-1: The enable pin of acoustic or optoelectronic devices (e.g. SPK AMP/Backlight/Charger OCP/OVP) suggest to use Peripheral_EN[0:5]
If use other GPIOs as enable pin, suggest to reserve 0201 NC to GND

Thermistor to sense AP temperature

1. NTC1101must keep a distance about 6~8 mm away from AP and far from other heat sources 10 mm at least.
2. The distance is the shortest distance from package edge to edge.

Title	Axman		
Size A3	Document Number	MT6762_MIPI and RF Control	Rev 1.0
Date: Wednesday, April 29, 2020	Sheet 1 of 38		

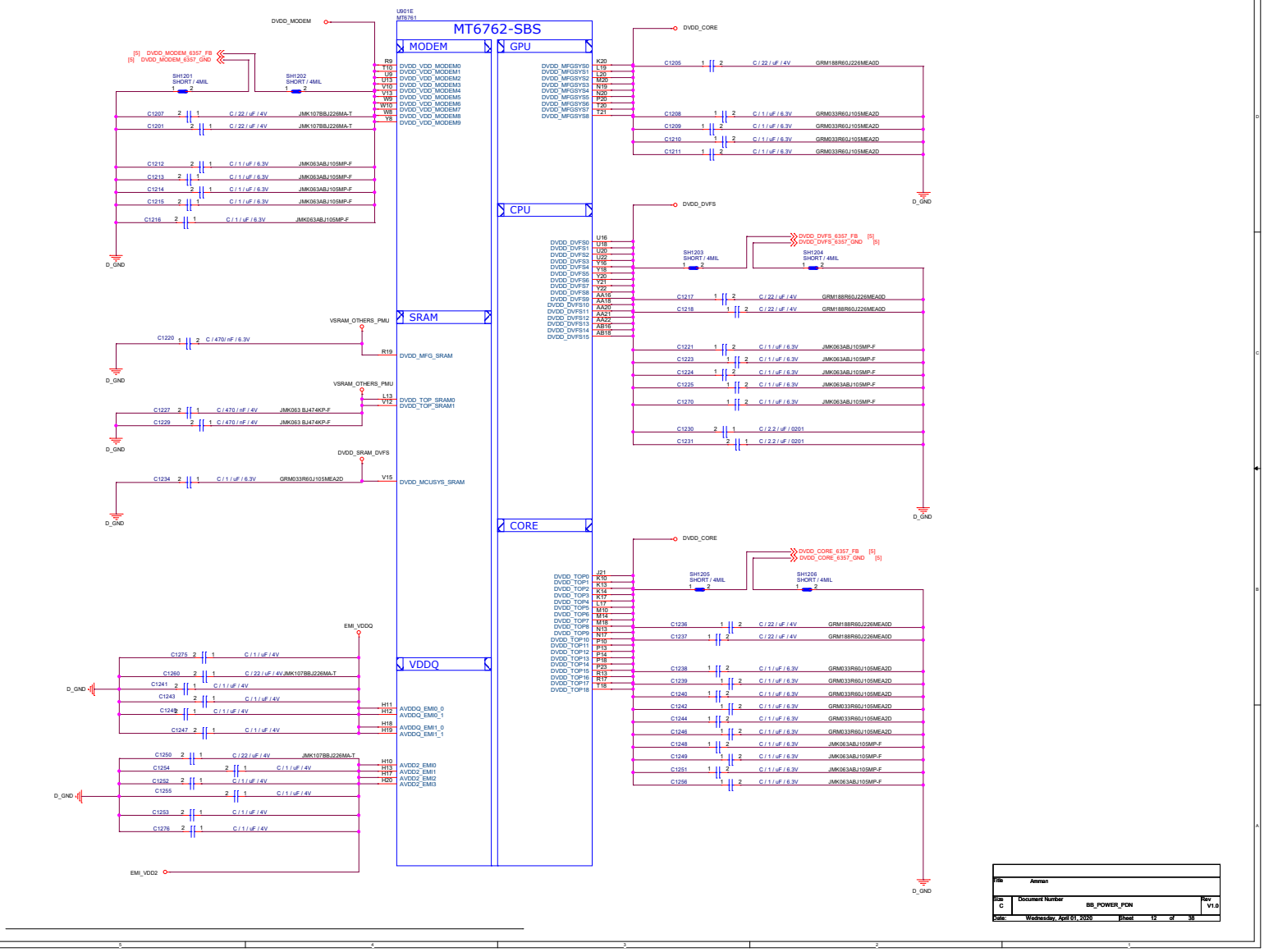

File	Amman		
Size C	Document Number BB_POWER_PDN		Rev V1.0
Date: Wednesday, April 01, 2020	Sheet 12 of 38		

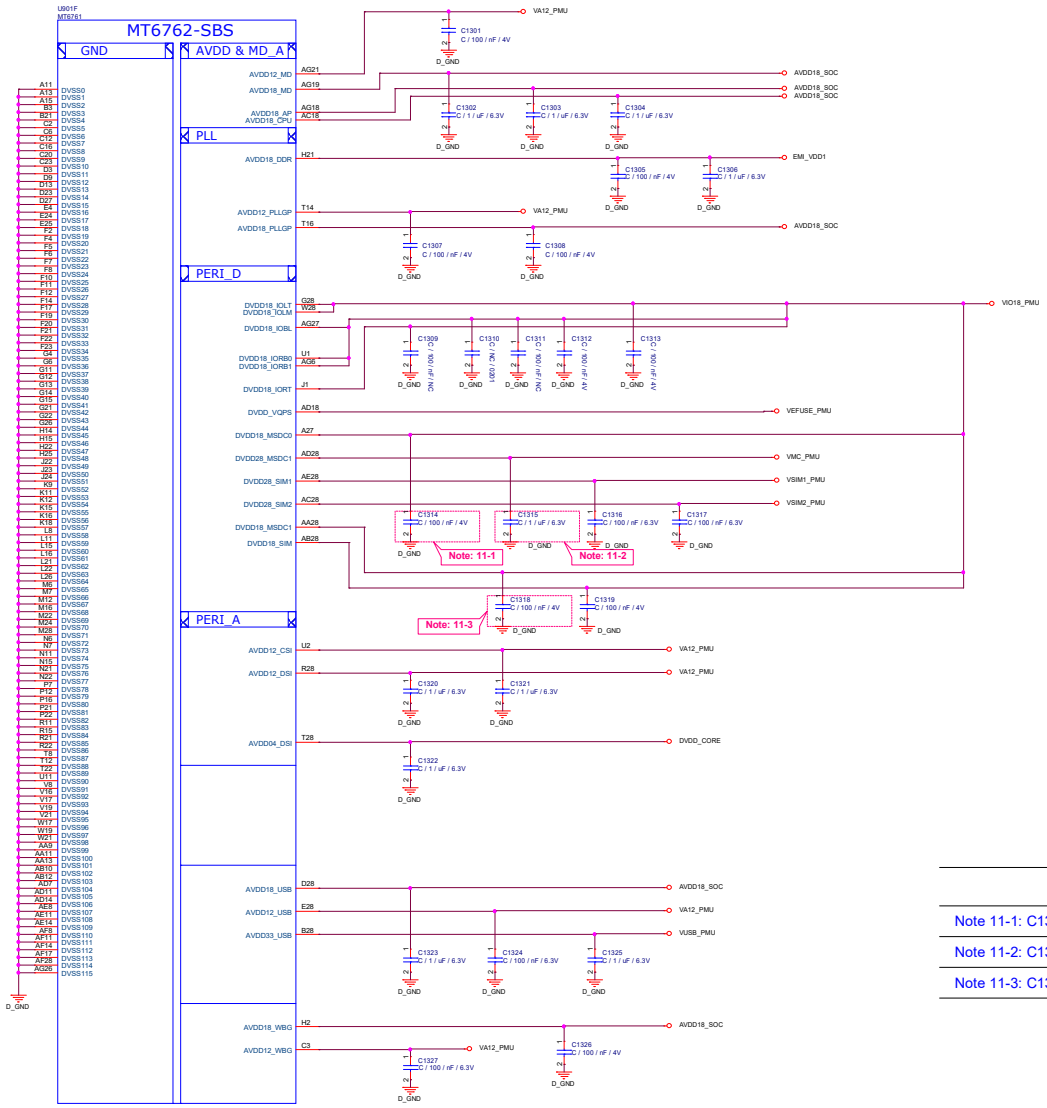

Note 11-1: C1314 closed DVDD18_MSDC0 150mil

Note 11-2: C1315 closed DVDD28_MSDC1 150mil

Note 11-3: C1318 closed DVDD18_MSDC1 150mil

File	Amman		
Size C	Document Number	BB_POWER_IO	Rev V1.0
Date: Wednesday, April 01, 2020	Sheet 13 of 38		

LDO for VA12 Note: 28-1

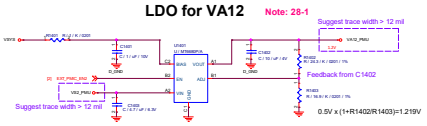

Ext. Bulk for VS2 Note: 28-2

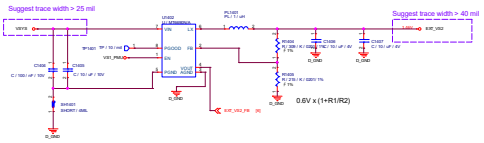

Ext. buck LPDDR4X/LPDDR4 VDRAM Note: 28-4

MT6691OOP/A / Ext. buck LP4X/LP4 VDRAM (VDD2)
I2C address: 0X57 (Write:0xAE, Read:0xAF)

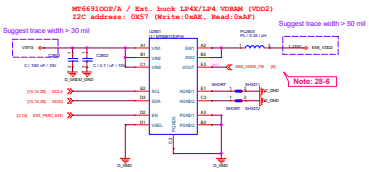

Ext. buck LPDDR4X VDDQ Note: 28-4

MT6691XOP/A / Ext. buck LP4X VDRAM(VDDQ)
I2C address: 0x50 (Write:0xA0, Read:0xA1)

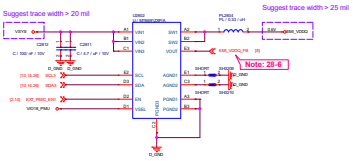

Reserved for LP4 DRAM [VDDQ=1.1V]

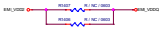

LPDDR4X/LPDDR4 VDD1 1.8V LDO Note: 28-5

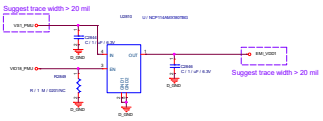

Note 28-1: VA12 Layout placement please close to AP

Note 28-2: VS2 Buck Layout placement please close to PMIC MT6357, only used for MT6762, NC for MT6761

Size	Annex		
Rev 0	Document Number	PCW005_WatPoly_Power	Rev V1.0
Date: Wednesday, Jul 1 2020	Time:	Sheet	of Sheets

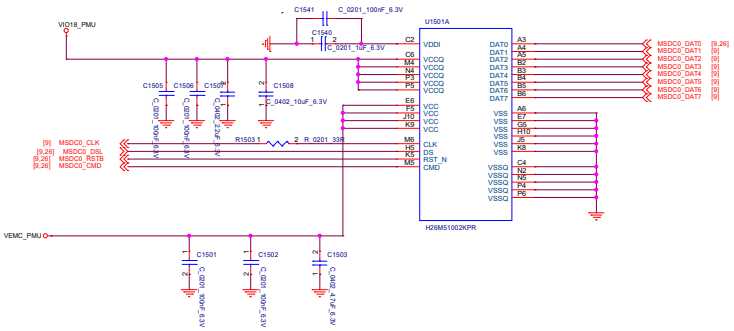

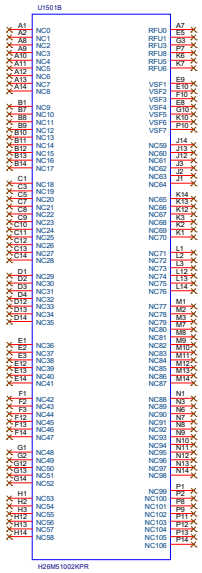

Note: 44-3

Note 44-1: Please refer to power supply related page select VDRAM1 output voltage properly for LPDDR3

Note 44-2: DRAM ZQx resistor = 240ohm (1%) that must be connected to GND

Note 44-3: Please refer to eMCP vendor's datasheet or MTK common design notice to get the recommendation bypass cap. value for VCC/VCCQ/VDDI power domains of eMMC.

Note 44-4: VDD2 VDDQ VDDCA decoupling cap: closed to DRAM ball.
For other cap for PMIC [>10uF, at PMIC page]:
please also refer to MMD and layout guide for placement.

Note 44-5: Please check MT6765, MT6762 and MT6761's capacitor value.

Project	C1517	C1418
MT6765	2.2uF	1uF
MT6762	2.2uF	1uF
MT6761	0.1uF	0.1uF

Title	Amman	
Size C	Document Number Memory_eMMC_LPDDR3	Rev V1.0
Date: Wednesday, April 01, 2020	Sheet 15 of 38	

BATTERY CONNECTOR

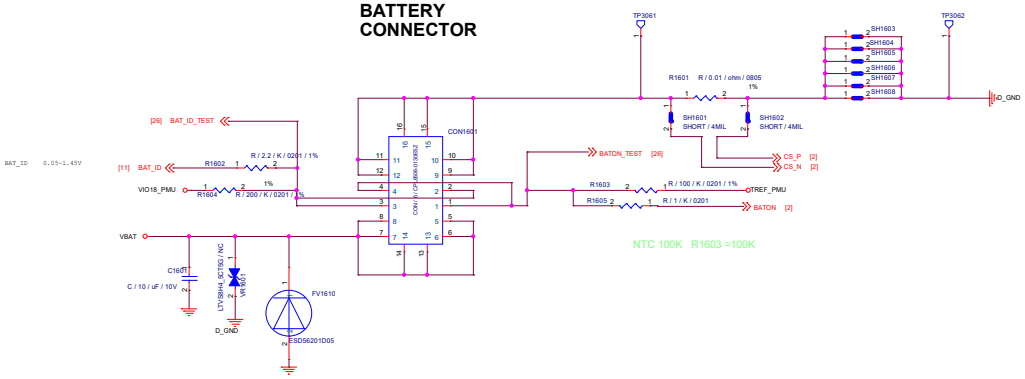

OVP

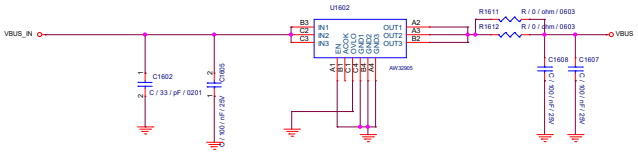

Title	Arrman		
Size C	Document Number	Batter/USB IF	Rev V1.0
Date:	Wednesday, April 01, 2020	Sheet 16 of 38	

Class K PA

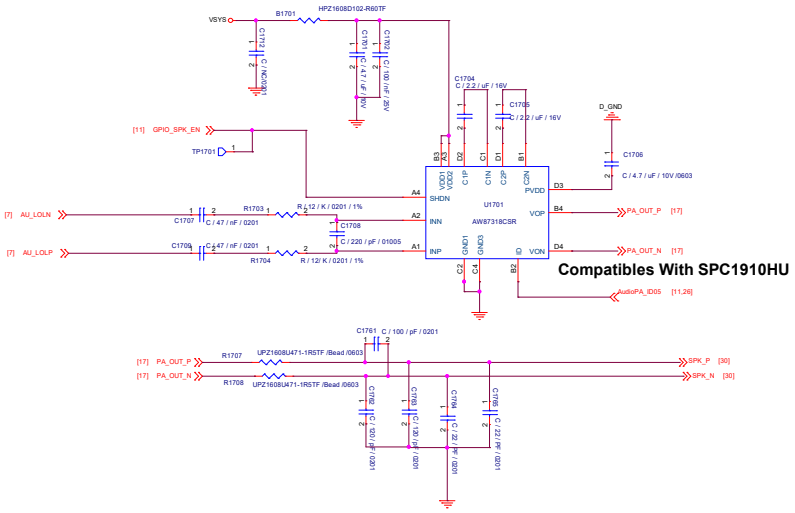

Title	Arrman		
Size C	Document Number	Speaker	Rev V1.0
Date: Wednesday, April 01, 2020	Sheet 17 of 38		

MIC2

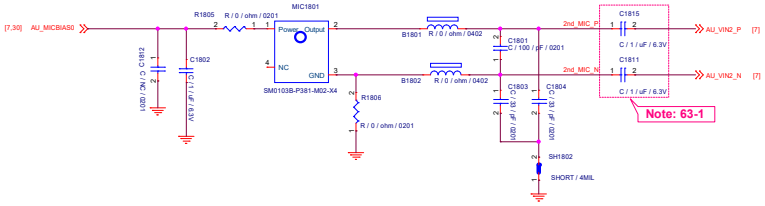

MIC1

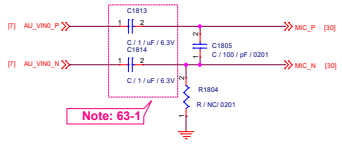

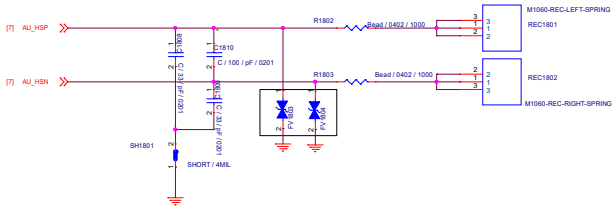

Schematic design notice of "63_PERI_AUDIO_IO" page.

Note 63-1: 1 uF for ACC mode
0 ohm for DCC mode

File	Arman		
Size C	Document Number MIC		Rev V1.0
Date: Wednesday, April 01, 2020	Sheet 18 of 38		

3.5mm Headphone Jack

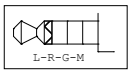

BOM 22Ω

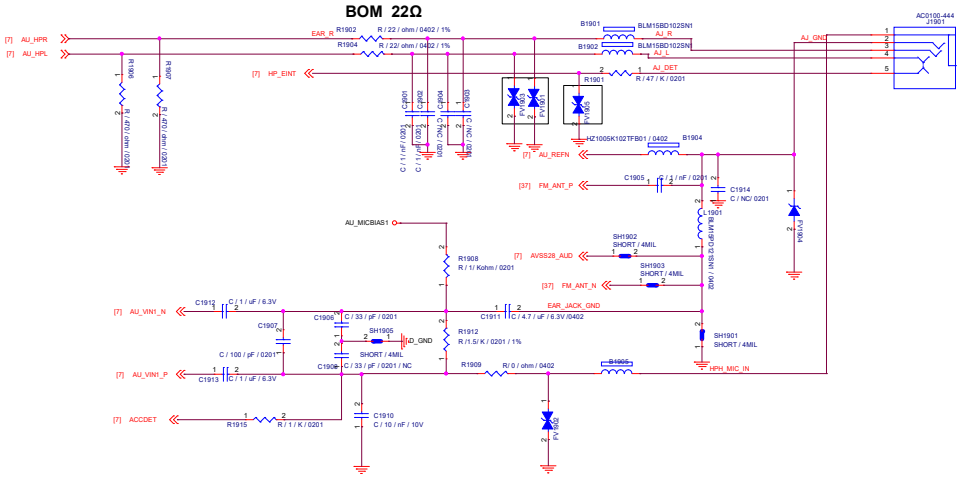

Title	Amman		
Size C	Document Number Earphone		Rev V1.0
Date: Wednesday, April 01, 2020	Sheet 19 of 38		

Main LCM

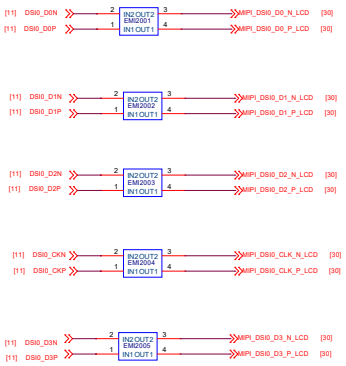

File	Amman		
Size C	Document Number LCD IF		Rev V1.0
Date: Wednesday, April 01, 2020	Sheet 20 of 38		

Main Camera

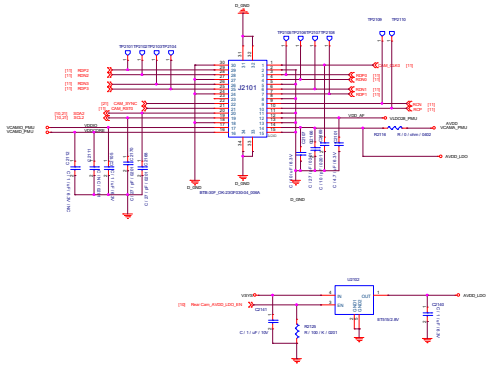

Front Camera

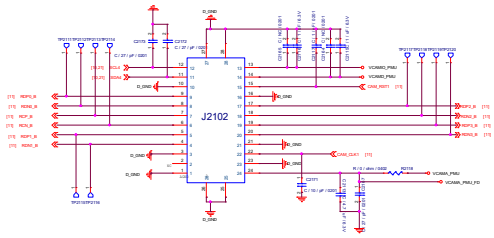

Main Flash LED

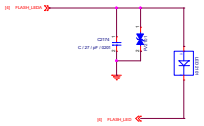

Macro Camera

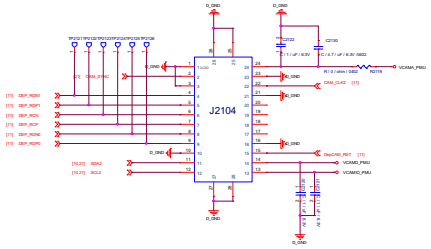

Dep Camera

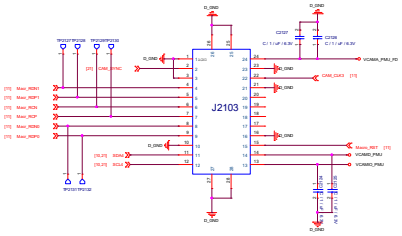

Title	Annex		
Size	Document Number		Rev
		Classe IV	V1.0
Date:	Wednesday, April 2, 2014	Sheet 20 of 28	

G-Sensor

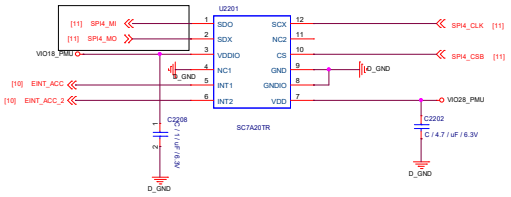

M SENSOR

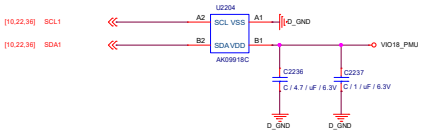

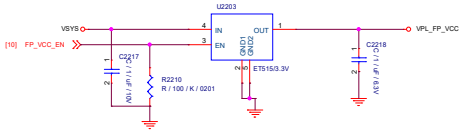

FP

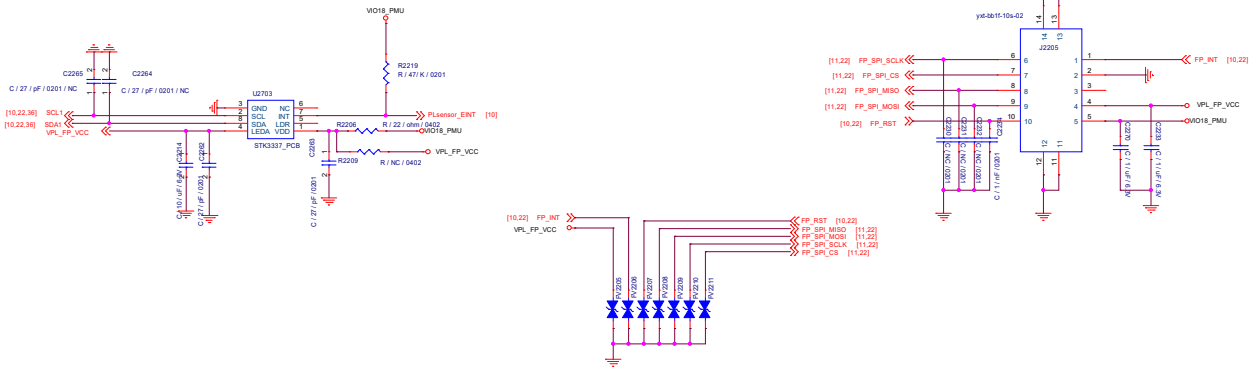

Title	Ammon		
Size C	Document Number Sensor		Rev V1.0
Date: Wednesday, April 01, 2020	Sheet 22 of 38		

SIM1

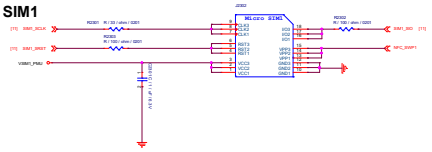

SIM2

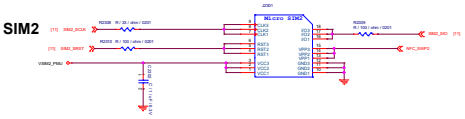

SD CARD

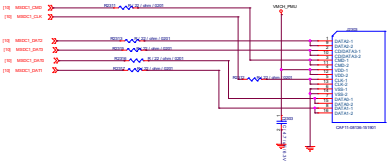

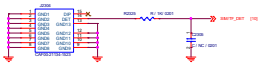

Title	Admin		
Size	Document Number		Rev
D	3SEFP F		V1.0
Date: Wednesday, April 29, 2015	Sheet 35 of 36		

Power Key / Key Pad

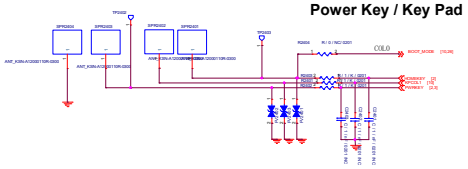

USB

BAT

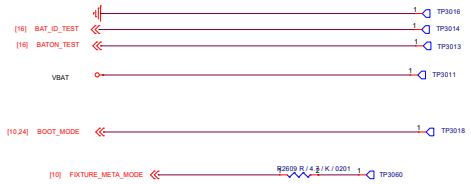

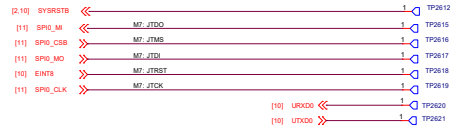

eMMC

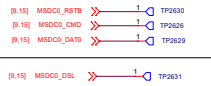

Board_ID

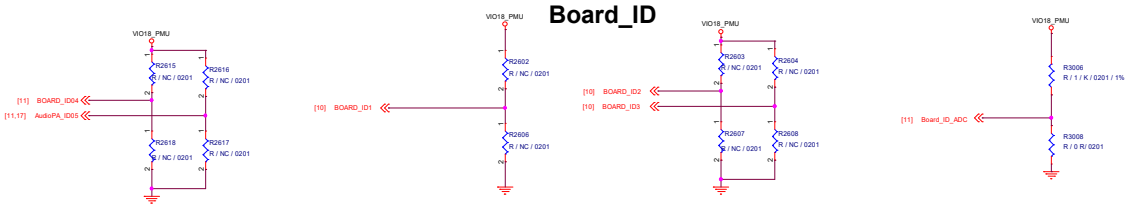

Title	Amman	
Size C	Document Number Test Point	Rev V1.0
Date: Wednesday, April 01, 2020	Sheet 26 of 38	

Note 52-1: NFC host I/F and power info are listed in the above connector, NFC COB reference schematic is in the file named "MTK ST NFC Reference Schematic_20170809"

Note 52-2: When NFC is applied, please keep
1. 0ohm NC between VSIM1_PMU and SIM1_VCC
2. 0ohm NC between VSIM2_PMU and SIM2_VCC

Note 52-3: When NFC is applied, please follow NFC COB reference schematic to draw NFC COB schematic

Title	Amman	
Size C	Document Number NFC	Rev V1.0
Date: Wednesday, April 01, 2020	Sheet 27 of 38	

贴片器件，钢网要开

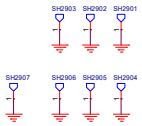

Shielding frame

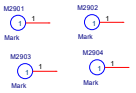

Marks point

Title	Amman	
Size C	Document Number Shielding	Rev V1.0
Date: Wednesday, April 01, 2020	Sheet 29 of 38	

MAIN_SUB_CON

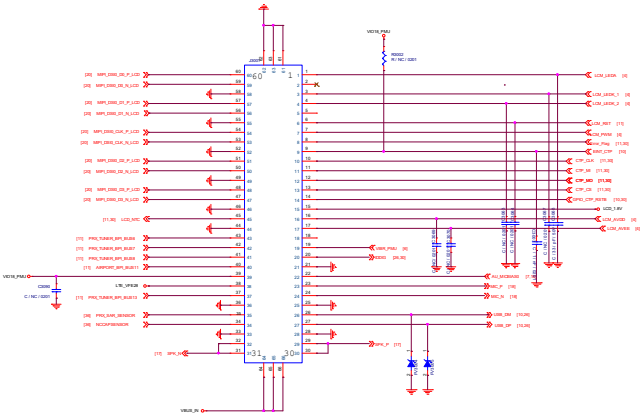

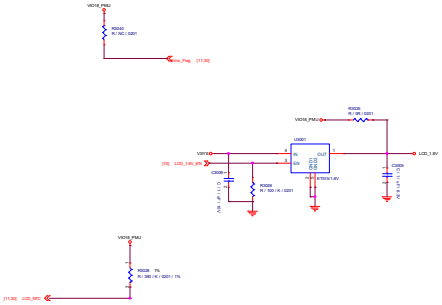

Title	Antenna		
Size	Document Number		Rev
D	SUB PCB IF		1.0
Date: Wednesday, April 29, 2015	Sheet 30 of 36		

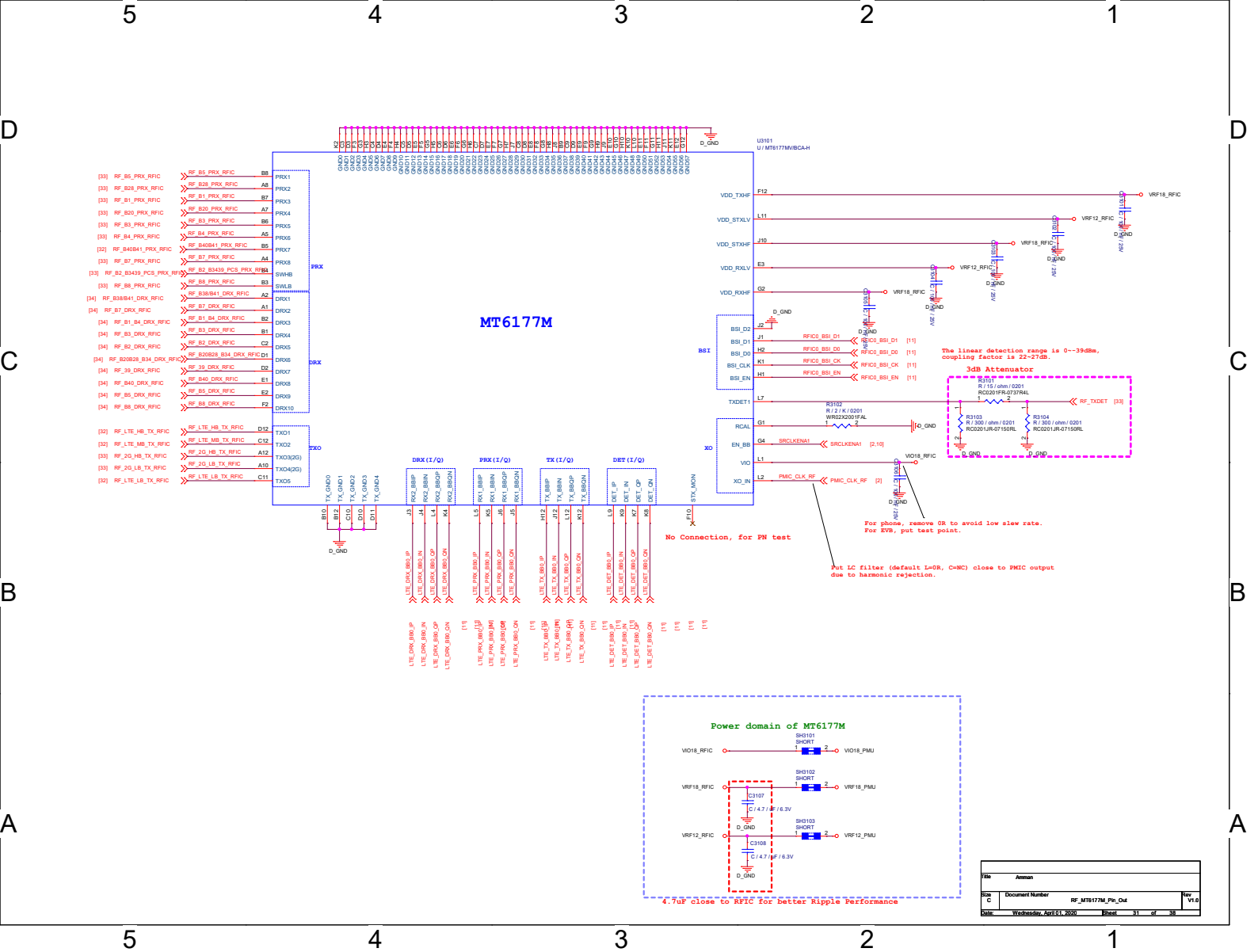

Title	Amman		
Size C	Document Number	RF_MT6177M_Pin_Out	Rev V1.0
Date:	Wednesday, April 01, 2020	Sheet 31 of 38	

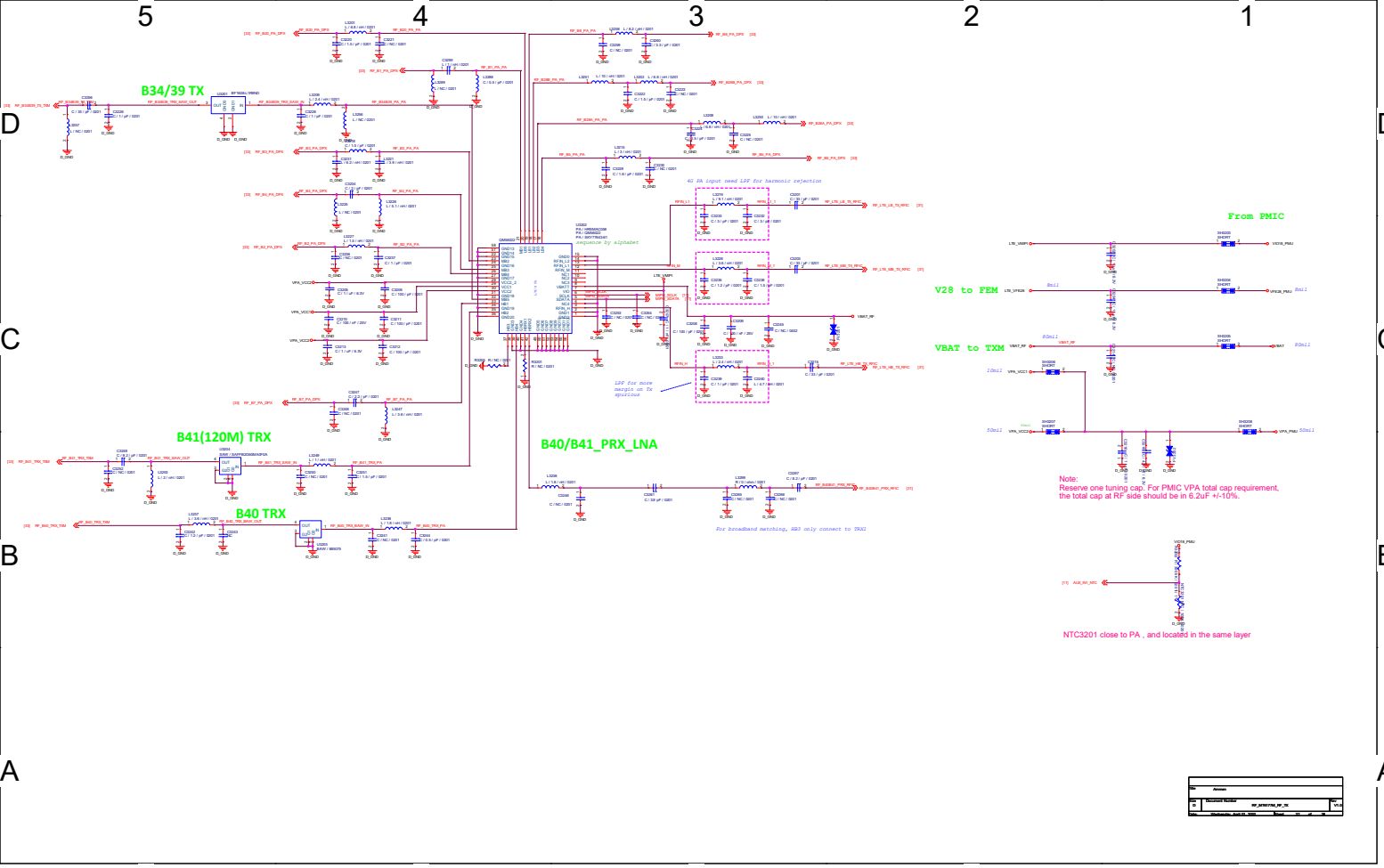
B34/39 TX
B41(120M) TRX
B40 TRX
B40/B41_PRX_LNA
4G PA input need LPF for harmonic rejection
LPF for more margin on Tx equation
For broadband matching, MB3 only connect to TRX1
From PMIC
V28 to FEM
VBAT to TXM
Note:
Reserve one tuning cap. For PMIC VPA total cap requirement, the total cap at RF side should be in 6.2uF +/-10%.
NTC3201 close to PA , and located in the same layer

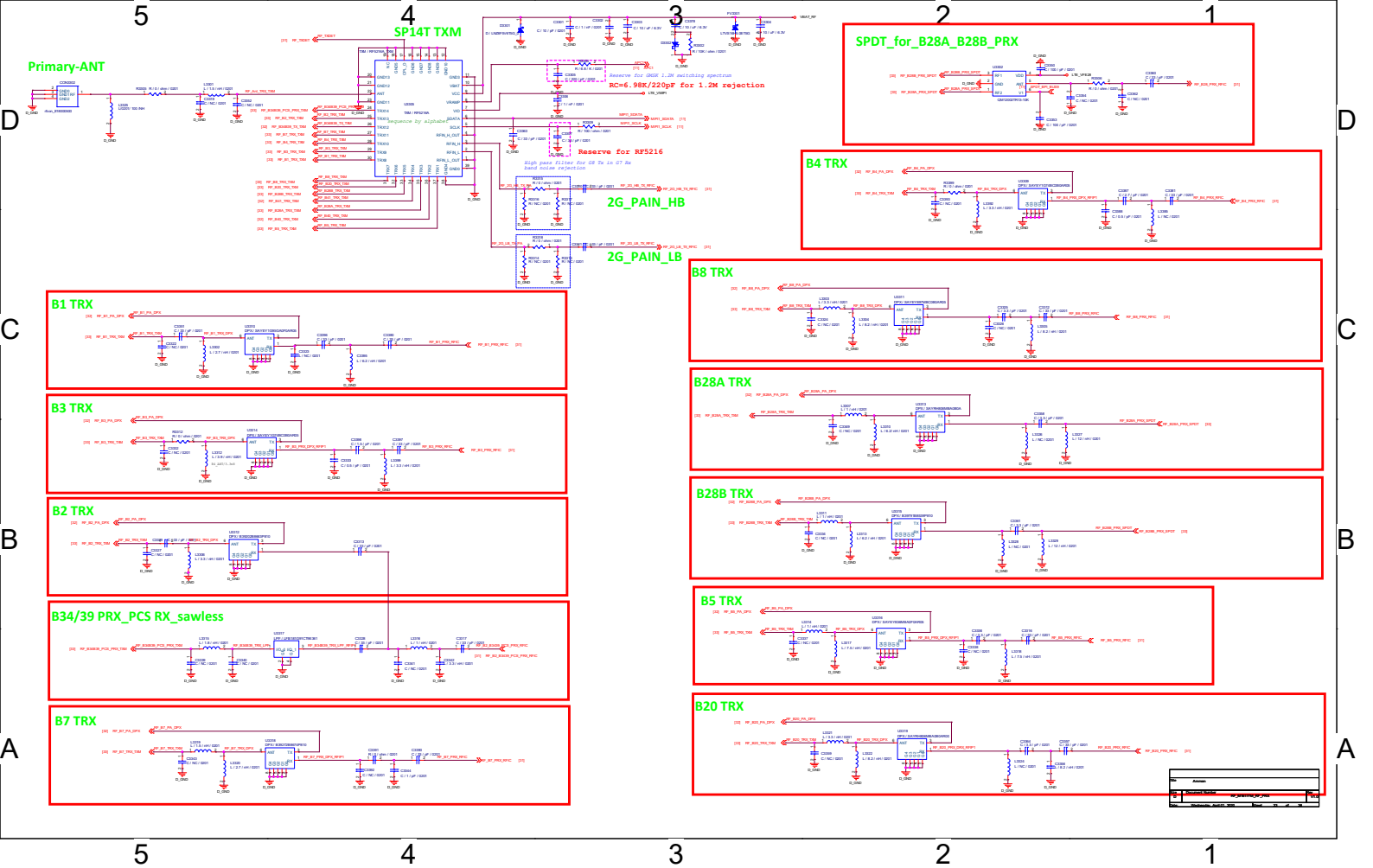
Primary-ANT
SP14T TXM
RC=6.98K/220pF for 1.2M rejection
Reserve for RF5216
2G_PAIN_HB
2G_PAIN_LB
SPDT_for_B28A_B28B_PRX
B4 TRX
B8 TRX
B1 TRX
B28A TRX
B3 TRX
B28B TRX
B2 TRX
B5 TRX
B34/39 PRX_PCS RX_sawless
B20 TRX
B7 TRX

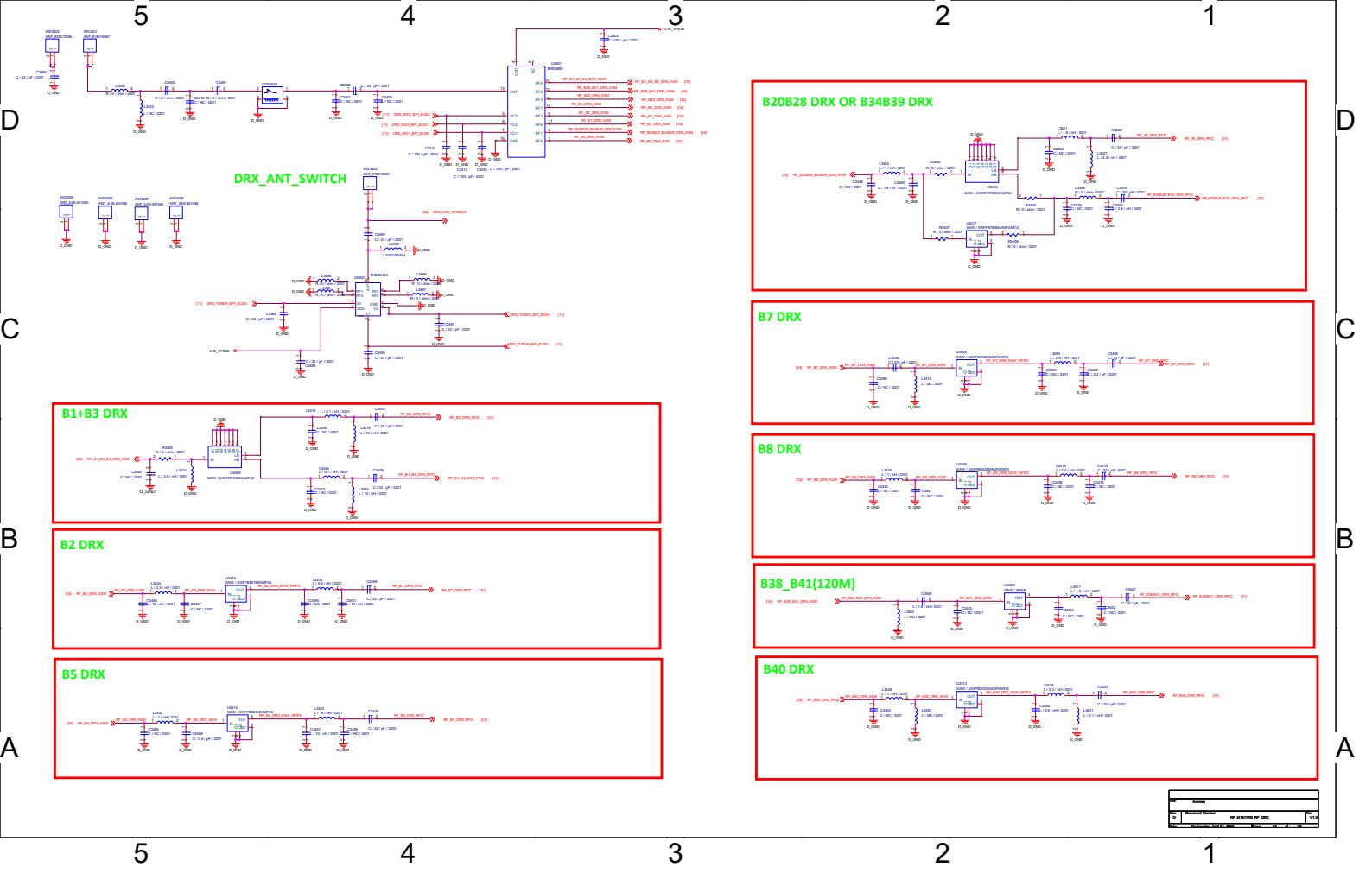
DRX_ANT_SWITCH
B1+B3 DRX
B2 DRX
B5 DRX
B20B28 DRX OR B34B39 DRX
B7 DRX
B8 DRX
B38_B41(120M)
B40 DRX

Sar-Sensor

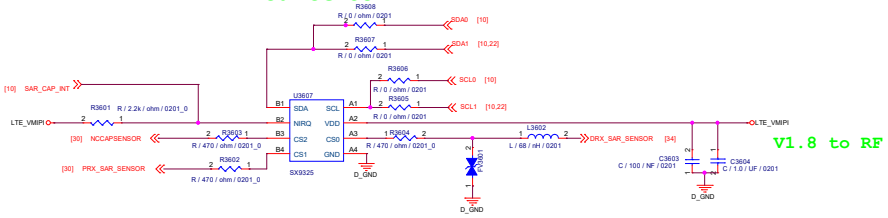

Title	Amman		
Size C	Document Number Capsensor		Rev V1.0
Date: Wednesday, April 01, 2020		Sheet 38 of 38	

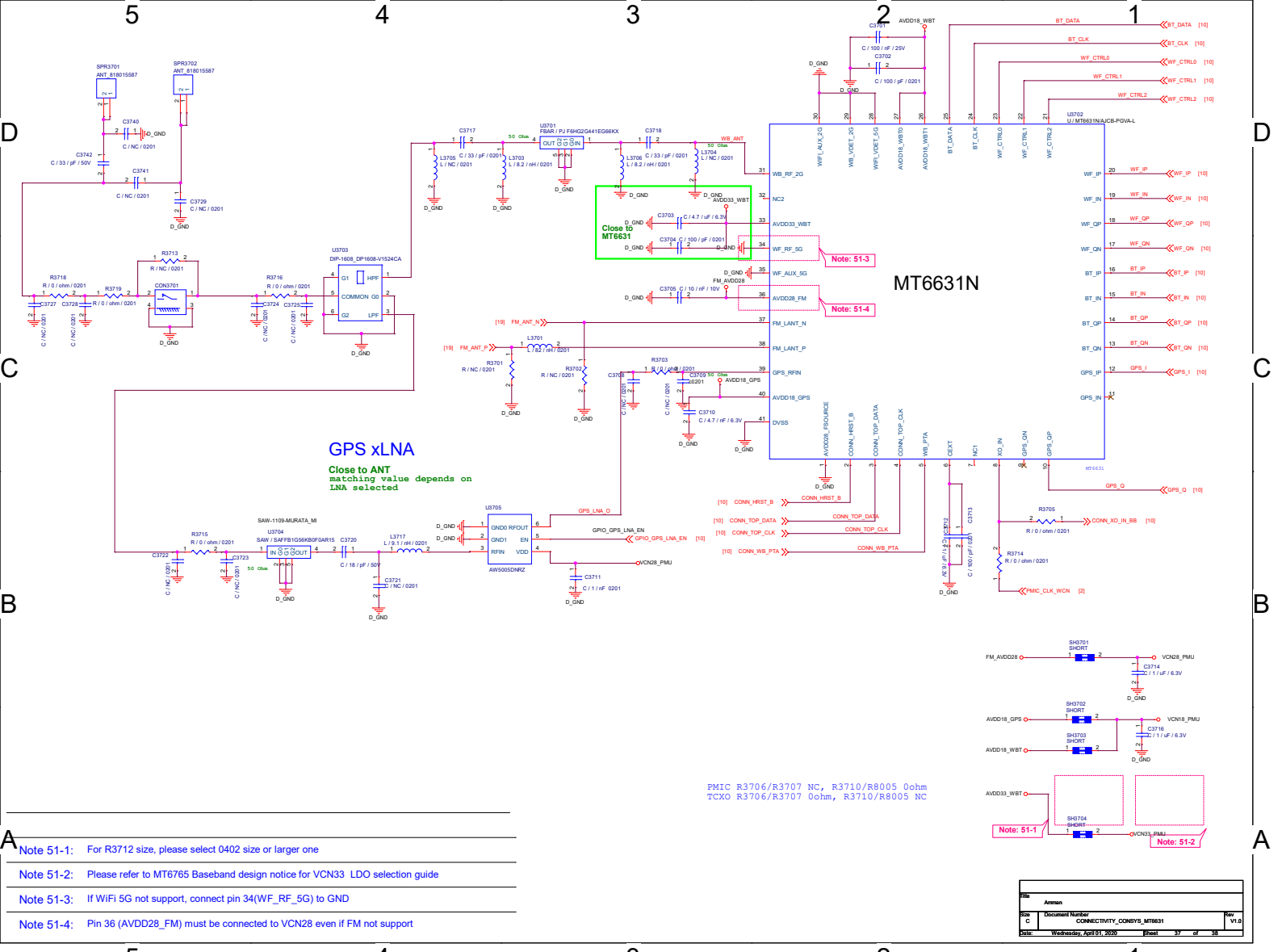

Note 51-1:	For R3712 size, please select 0402 size or larger one
Note 51-2:	Please refer to MT6765 Baseband design notice for VCN33 LDO selection guide
Note 51-3:	If WiFi 5G not support, connect pin 34(WF_RF_5G) to GND
Note 51-4:	Pin 36 (AVDD28_FM) must be connected to VCN28 even if FM not support

Title	Amman	
Size C	Document Number CONNECTIVITY_CONSYS_MT6631	Rev V1.0
Date: Wednesday, April 01, 2020	Sheet 37 of 38	